Eurotrac
Stougjesdijk 153 3271KB
Mijnsheerenland NL
info@eurotrac.nl
+31 (0) 186 612333



EUROTRAC W11 I

The Eurotrac W11-I features an industry mast for a better view of your work!

Fitted as standard with:

- 3 Cylinder Kubota D1105
- Joystick controls
- Extra hydr. function
- Hydraulic quick coupler
- Hydrostatic drive
- Work lighting/ beacon
- Tyre size 26×12-12AS

€22,200.00

Specifications

ELECTRICAL INFORMATION

Electric system	12 V

ENGINE

Cooling	Liquid
Engine power	26

HYDRAULIC SYSTEM

Oil yield	32
Workload	180 bar

OTHER

Diesel tank	25
Hydro tank	40

WEIGHT	
Lifting frame horizontal & machine straight	1050
Lifting frame horizontal & machine tilted	650 kg
Max. Lifting capacity	1100
Own weight	1700

Technical drawing

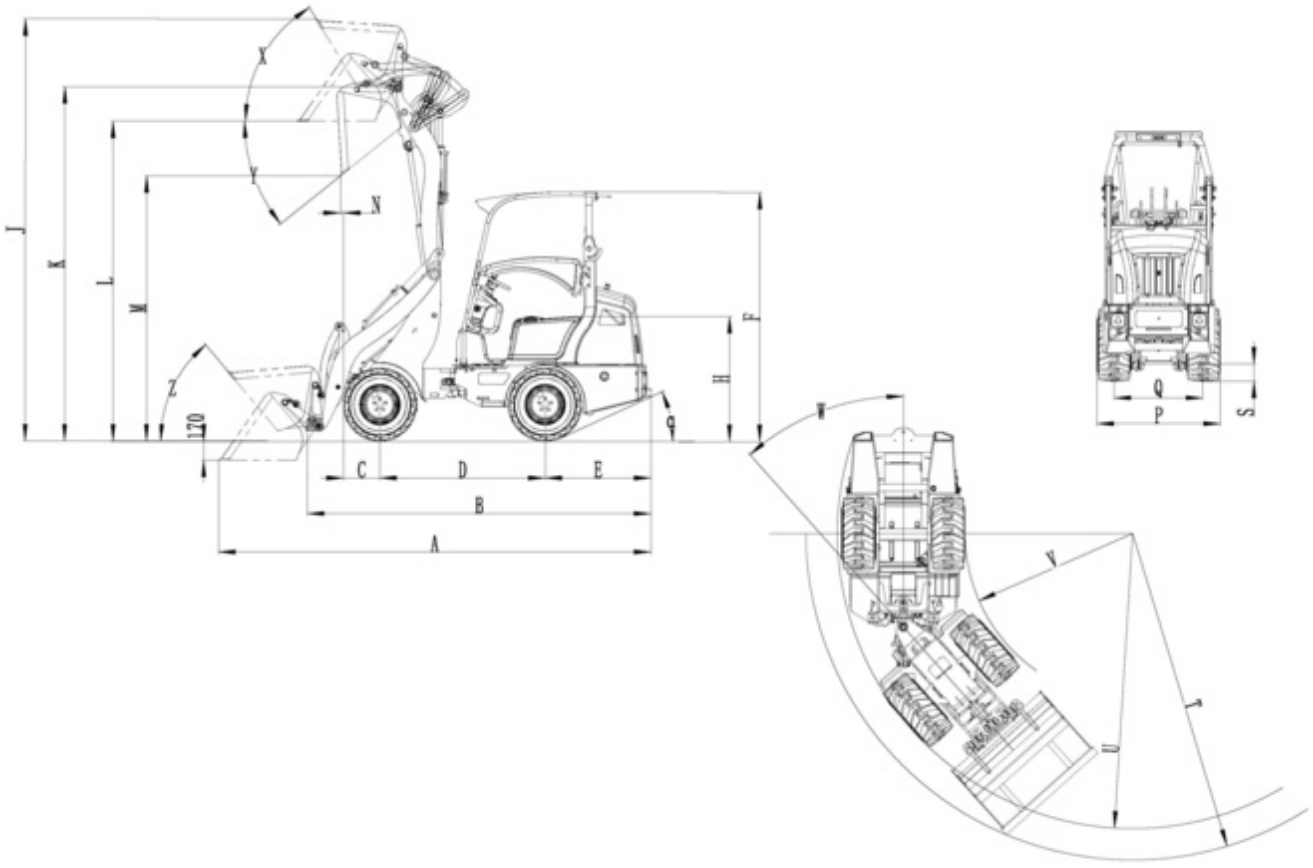

(A) Overall length with bin	3780
(B) Overall length without bin	2960
(C) Bin pivot	430
(D) Cradle base	1370
(E) Rear overhang	960
(F) Height to top of roof	2210
(H) Seat height	1128
(J) Total working height	2790
(K) Max. lifting height	2200
(L) Loading height	2000
(M) Ejection height	1460
(N) Range (m)	482
(O) Digging depth	183
(P) Overall width	1110
(Q) Track width	803
(S) Ground clearance	173
(T) Outer diameter	2220
(U) Turning circle	2590
(V) Inside turning circle	1110
(W) Rotation angle	45
(X) Tilting angle at max. lifting height	49
(Y) Tipping angle	43
(Z) Tilt-in angle	50

Pictures






Eurotrac






Eurotrac













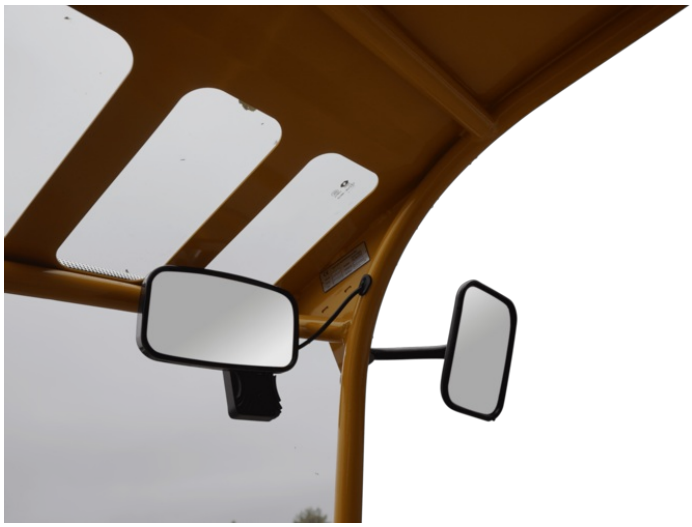


Eurotrac









